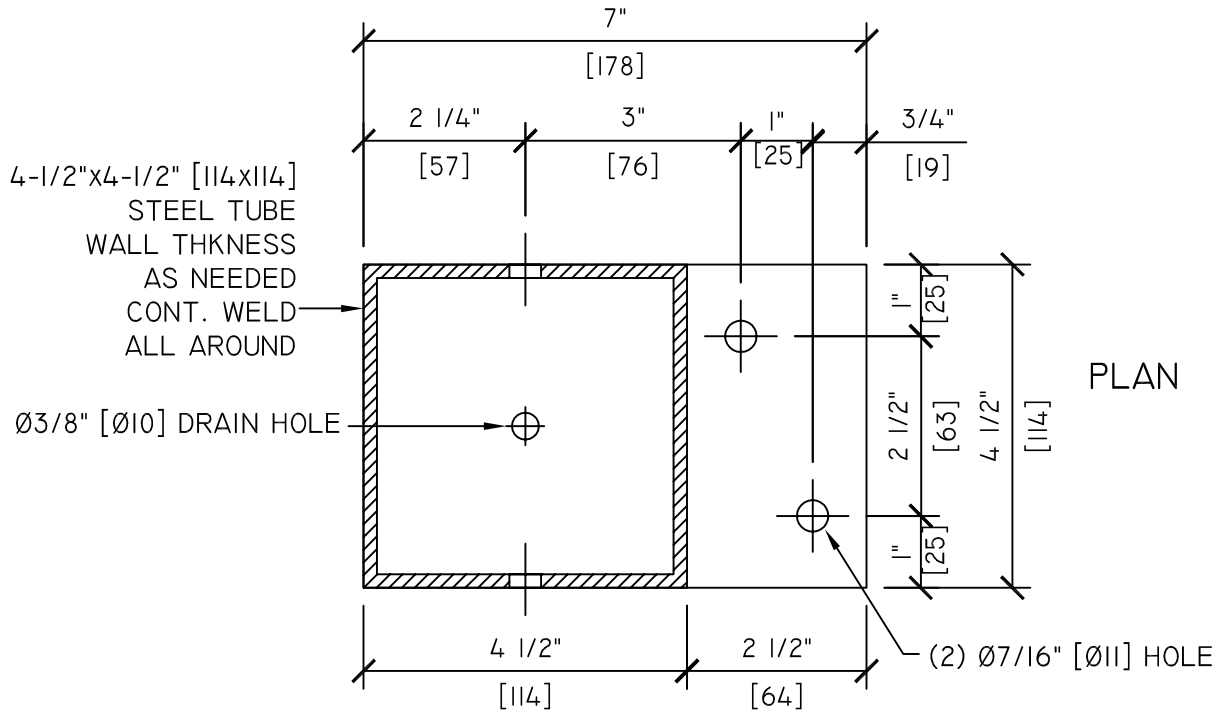

PLAN

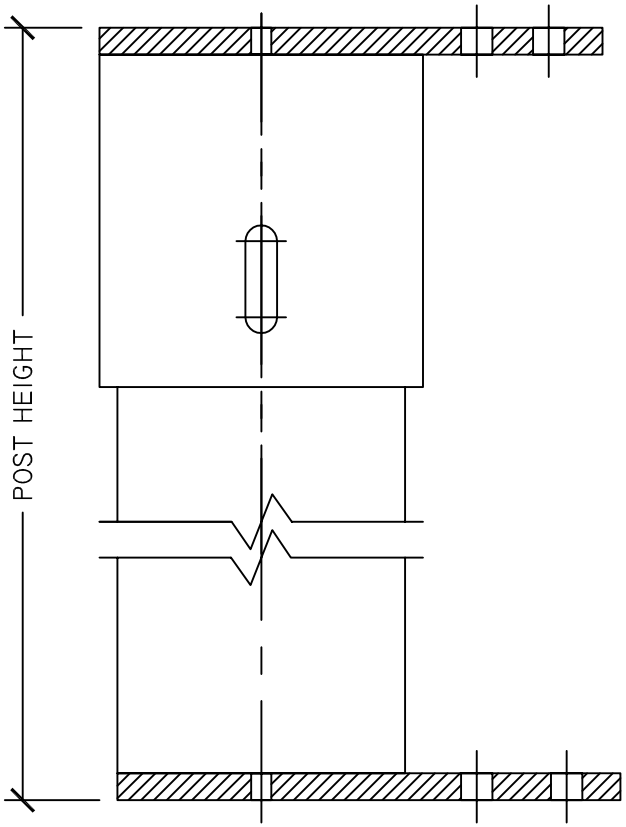

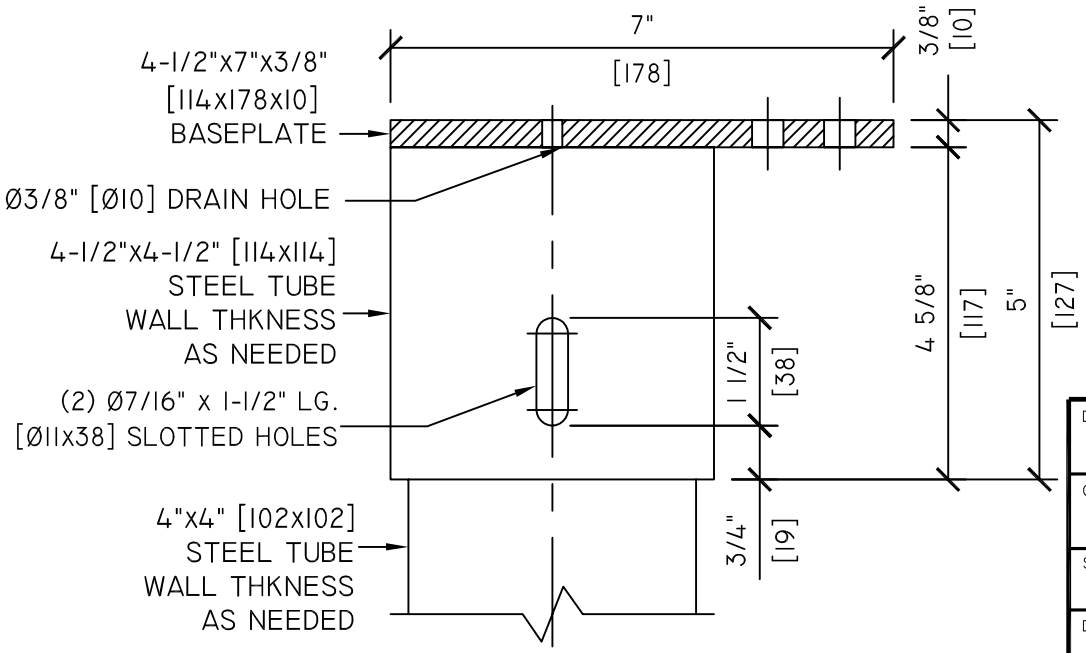

ELEV

DRAWN BY: F.C.	metalco®
CHECKED BY: GHS	
SCALE: NTS	TITLE: 4" TELESCOPIC POST W/ 4-1/2" x 7" OFFSET BASEPLATE
DATE: 03.06.02	SHEET NO: D-4TELPOST-4