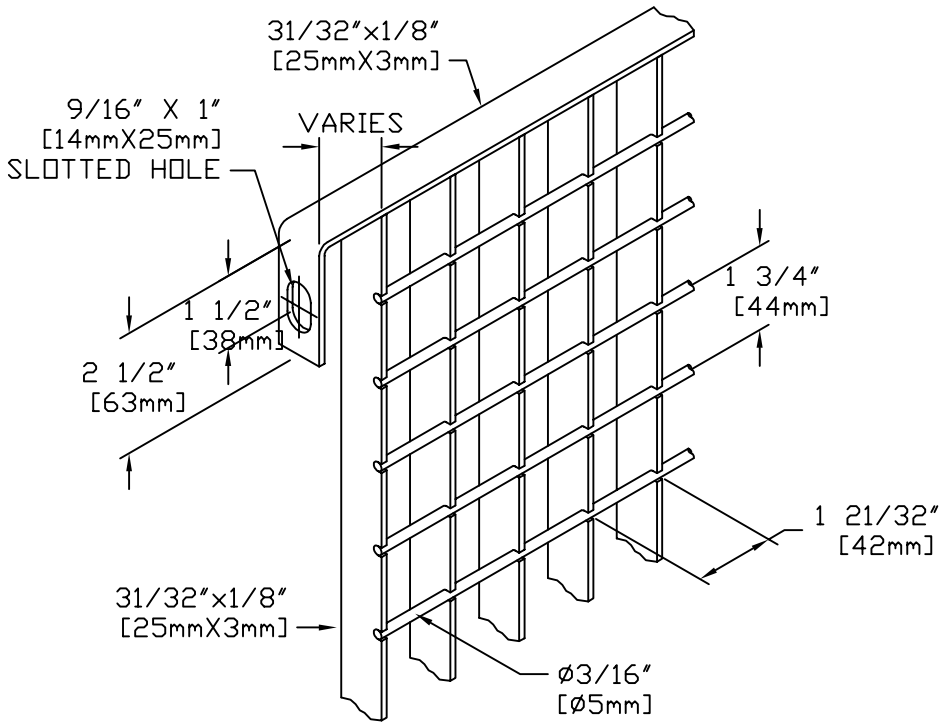

DRAWN BY: F.C.	metalco®
CHECKED BY: GHS	
SCALE: NTS	TITLE: PANEL DETAIL GRIGLIATO "L" FOR ATTACHMENT BRACKETS
DATE: 02/21/02	SHEET NO: D-GLTOL-B